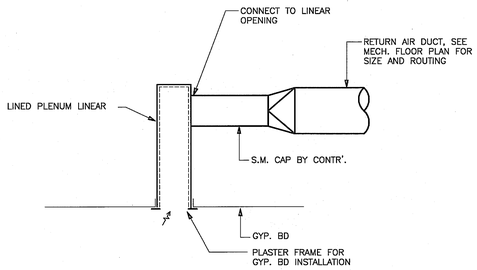

10 RETURN AIR LINEAR
SCALE: NONE

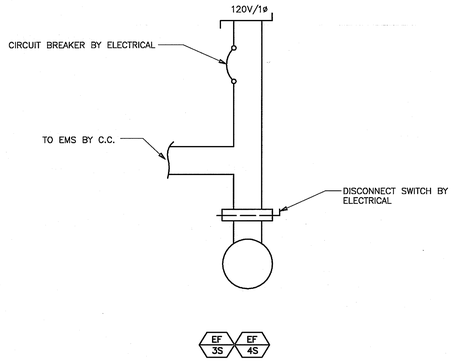

7 EXHAUST FAN CONTROL
SCALE: NONE

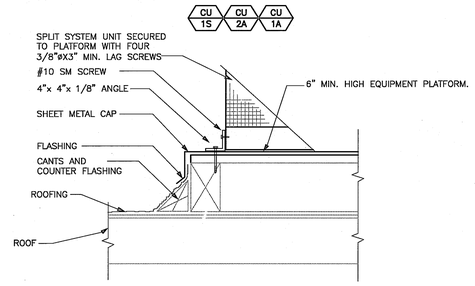

NOTE:

SEE STRUCTURAL OR ARCHITECT DRAWINGS FOR ADDITIONAL INFORMATION.

4 ROOF-TOP CONDENSING UNIT
SCALE: NONE

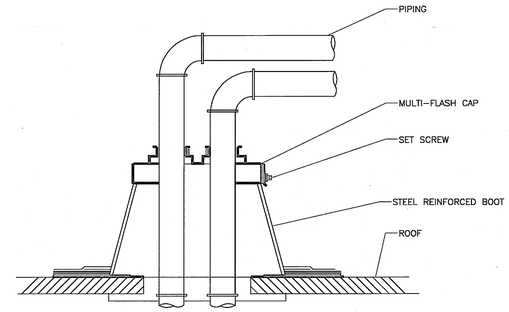

NOTE:

1. STONEMAN SEAMLESS LEAD MULTI-FLASH SYSTEM FOR PIPING. INSTALL PER MANUFACTURER'S RECOMMENDATIONS.

1 ROOF MULTI-FLASH PIPE PORTAL
SCALE: NONE

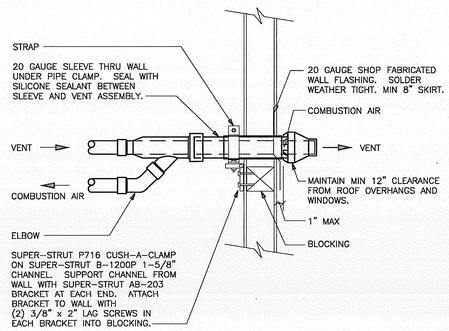

8 COMBUSTION AIR AND VENT THRU WALL DETAIL
SCALE: NONE

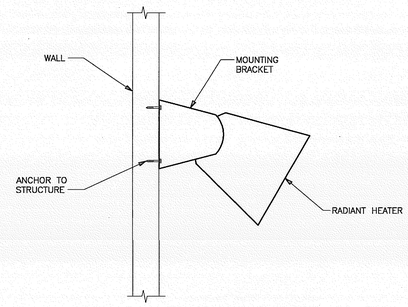

NOTE:

MAINTAIN MANUFACTURERS MIN. CLEARANCES TO COMBUSTIBLE MATERIALS. CONTRACTOR SHALL FURNISH AND INSTALL FACTORY SUPPLIED "CLEARANCE SAFETY SIGNS" ADJACENT TO EACH HEATER FOR OCCUPANTS IDENTIFICATION.

5 RADIANT HEATER
SCALE: NONE

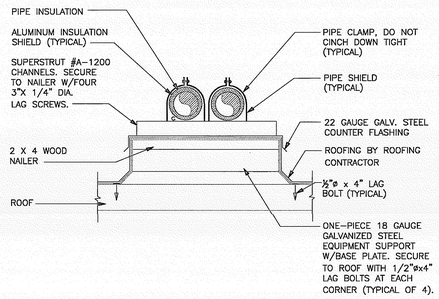

2 ROOF PIPE SUPPORT
SCALE: NONE

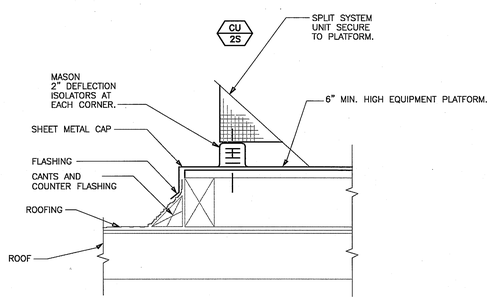

NOTE:

SEE STRUCTURAL OR ARCHITECT DRAWINGS FOR ADDITIONAL INFORMATION.

9 ROOF-TOP CONDENSING UNIT
SCALE: NONE

NOTE:

PROVIDE CONTROL DEVICES (RELAYS, CONTACTS, ETC.) TO INTERLOCK RH-1M & 2M TO OPERATE TOGETHER FOR A FULLY FUNCTIONAL SYSTEM.

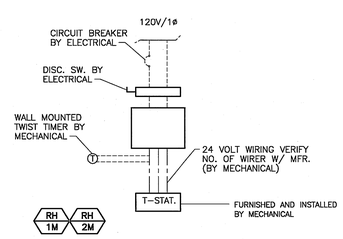

NOTE:

FOLLOW MANUFACTURER'S INSTALLATION GUIDELINES

6 RADIANT HEATER CONTROL
SCALE: NONE

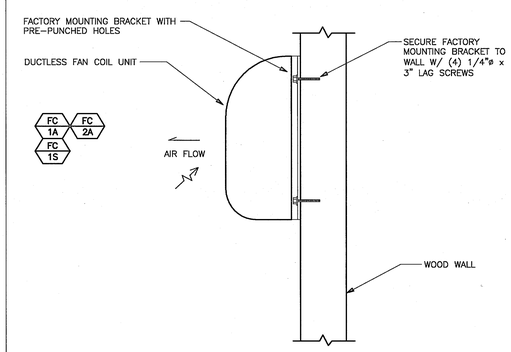

3 WALL MOUNTED DUCTLESS FAN COIL UNIT
SCALE: NONE

MOORE IACOFANO GOLTSMAN, INC.
801 N. HARBOR BLVD.
FULLERTON, CA 92831
TEL 714/871-3638
FAX 714/871-1188
www.migcom.com

PITASSI ARCHITECTS, INC.
8439 White Oak Ave., Suite. 105
Rancho Cucamonga, Ca 91730
Tel. 909-980-1361 ▪ Fax. 909-944-5814
e-mail. pjpaia@pitassiarchitects.com

CONSULTANT:

GLUMAC
16735 Von Karman Ave., Suite 250
Irvine, CA 92606-4665
T. 949.833.8180 F. 949.833.0252
www.glumac.com
Job No.: 40013491
Contact: RGIAK
engineers for a sustainable future®

PERRIS VALLEY Big League Dreams

2155 Trumble Road
Perris, California 92570

SHEET TITLE
MECHANICAL DETAILS

100% CONSTRUCTION DOCUMENT

DATE	REVISIONS

STAMP

CHECKED BY	DATE
-	-

DATE 01-07-10	FILE NAME
DRAWN BY -	SHEET M-6.3
JOB NO. 05208.00	
SCALE	