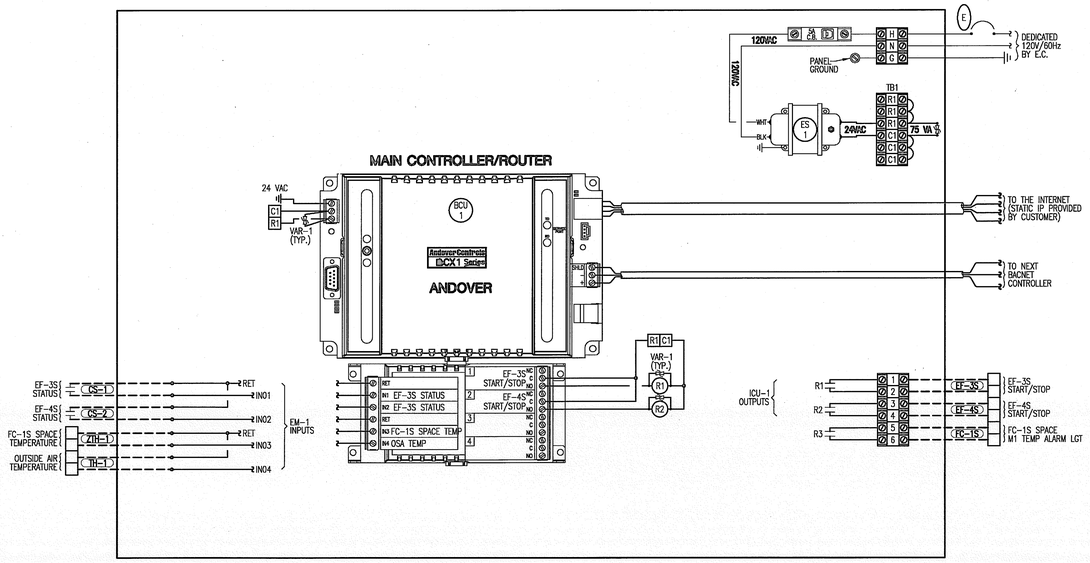

NOTES:

1. NEMA 1 PANEL LOCATION IN ROOM S119, SEE M-2.1.
2. ALL 120 VOLT POWER AND CONDUIT BY DIV. 16.

1 STADIUM BLDG NETCONTROLLER & EXH FANS (EF-3S & 4S) AND FC-1S MONITORING CONTROL PANEL WIRING DIAGRAM

SCALE: NONE

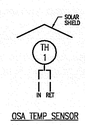

NOTE:
MOUNT AWAY FROM DIRECT SUNLIGHT
ONLY ONE UNIT WILL BE PROVIDED WITH OSA TEMP PER BUILDING (GLOBAL).

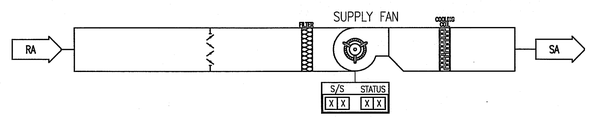

UNIT MANUFACTURER FACTORY CONTROLS, BY OTHERS
TEMP SENSOR FOR MONITORING & ALARM ONLY

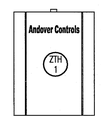

NOTE:
TEMPERATURE SENSOR TO BE MOUNTED AT 48" ABOVE FINISHED FLOOR.

2 FC-1S AIR FLOW SCHEMATIC

SCALE: NONE

MIG
MOORE IACOFANO GOLTSMAN, INC.
801 N. HARBOR BLVD.
FULLERTON, CA 92831
TEL 714/871-3638
FAX 714/871-1188
www.migcom.com

PITASSI ARCHITECTS, INC.
8439 White Oak Ave., Suite. 105
Rancho Cucamonga, Ca 91730
Tel. 909-980-1361 ▪ Fax. 909-944-5814
e-mail. pjpala@pitassiarchitects.com

CONSULTANT:

GLUMAC
16735 Von Karman Ave., Suite 250
Irvine, CA 92606-6965
T. 949.833.8190 F. 949.833.0252
www.glumac.com
Job No.: 40613401
Contact: RG/AK
engineers for a sustainable future

PERRIS VALLEY Big League Dreams

2155 Trumble Road
Perris, California 92570

SHEET TITLE
ENERGY MANAGEMENT SYSTEM CONTROL DIAGRAMS

100% CONSTRUCTION DOCUMENT

DATE	REVISIONS

STAMP

Production Dept. | Project Manager | Project Engineer

REGISTERED PROFESSIONAL ENGINEER RICHARD HOLZER No. 22941 Exp. 03-30-10 MECHANICAL STATE OF CALIFORNIA

CHECKED BY	DATE
-	-

DATE	FILE NAME
01-07-10	
DRAWN BY	SHEET
-	M-6.7
JOB NO. 05208.00	
SCALE	