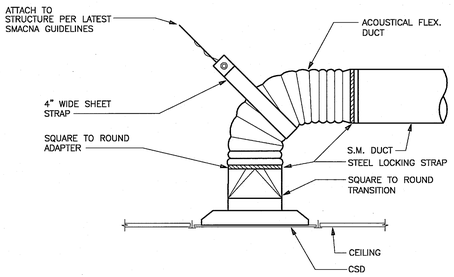

10 SQUARE CEILING DIFFUSER
SCALE: NONE

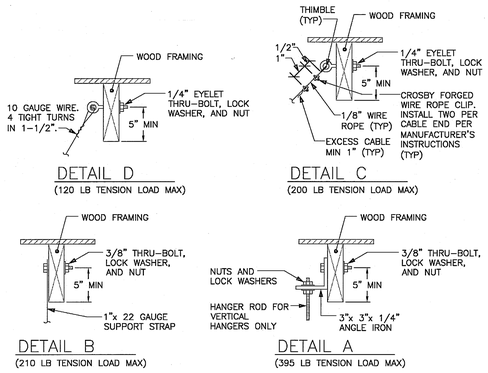

NOTE:

SEE LATEST SMACNA SEISMIC RESTRAINT MANUAL.

7 WOOD UPPER ATTACHMENTS
SCALE: NONE

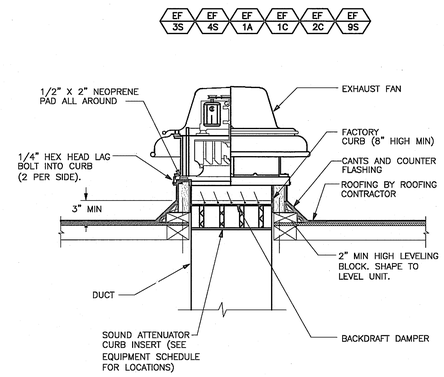

4 ROOF-TOP EXHAUST FAN
SCALE: NONE

NOTE:

SEE STRUCTURAL OR ARCHITECTURAL DRAWINGS FOR ADDITIONAL INFORMATION

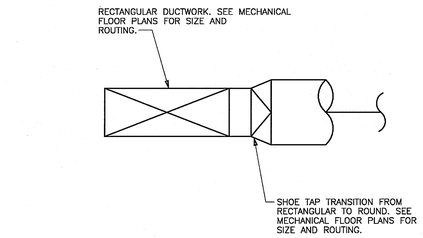

1 CONNECTION SECTION VIEW
SCALE: NONE

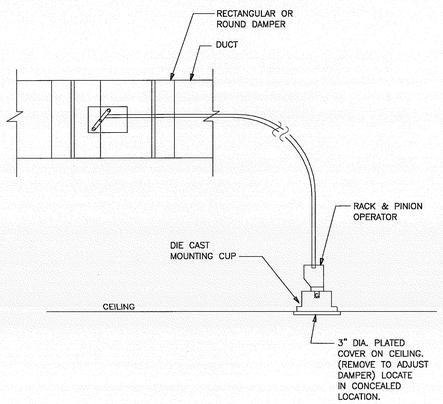

11 YOUNG REGULATOR
SCALE: NONE

NOTE:

CONTRACTOR SHALL FIELD PAINT PLATED COVERS TO MATCH ADJACENT CEILINGS PRIOR TO INSTALLATION, SO AS NOT TO IMPAIR PROPER OPERATIONS.

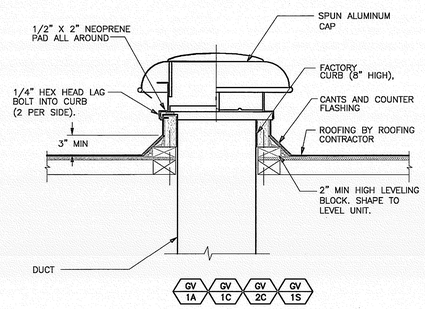

8 ROOF-TOP GRAVITY HOOD
SCALE: NONE

NOTE:

SEE STRUCTURAL OR ARCHITECTURAL DRAWINGS FOR ADDITIONAL INFORMATION

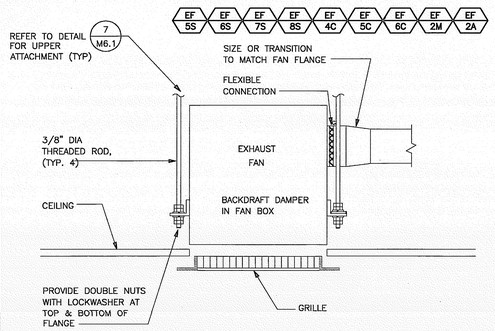

5 CEILING EXHAUST FAN
SCALE: NONE

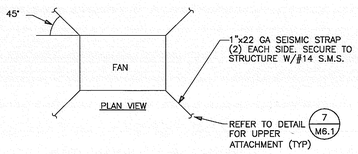

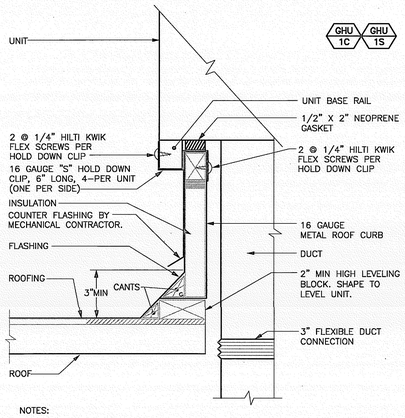

NOTES:

1. COORDINATE EXACT ROOF CONSTRUCTION MEANS AND METHODS WITH ARCHITECTURAL AND STRUCTURAL PLANS.
2. SEE STRUCTURAL OR ARCHITECTURAL DRAWINGS FOR ADDITIONAL INFORMATION

2 ROOF-TOP CURB WITHOUT ISOLATORS
SCALE: NONE

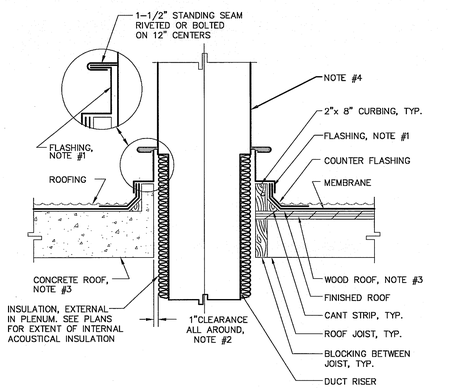

NOTE:

1. COORDINATE ROOF OPENING BLOCKING, CURBING, CANT STRIP & FLASHING WITH ROOFING CONTRACTOR. ROOF PENETRATIONS SHALL NOT VOID ROOF WARRANTY.
2. IF PENETRATION MUST BE FIRE RATED, THE PACKING & SEALING MATERIALS & SYSTEM OF INSTALLATION SHALL BE APPROVED BY FIRE MARSHAL
3. COORDINATE SIZE & LOCATION OF ROOF PENETRATION WITH STRUCTURAL ENGINEER.
4. SUPPPLEMENTAL WIND BRACING MAY BE REQUIRED.
5. SEE STRUCTURAL OR ARCHITECTURAL DRAWINGS FOR ADDITIONAL INFORMATION.

12 DUCT - ROOF PENETRATION
SCALE: NONE

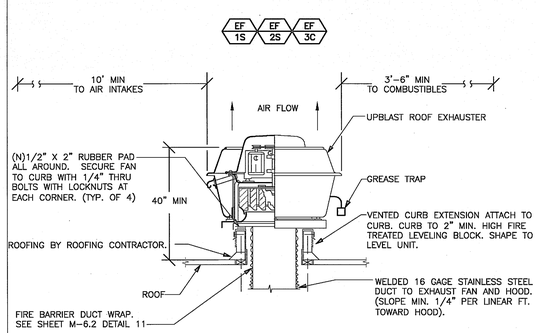

NOTES:

1. 1" MIN. CLEAR BETWEEN DUCT AND STRUCTURE (ALL SIDES).
2. SEE STRUCTURAL OR ARCHITECTURAL DRAWINGS FOR ADDITIONAL INFORMATION.

9 TYPE 1 ROOF-TOP GREASE EXHAUST FAN
SCALE: NONE

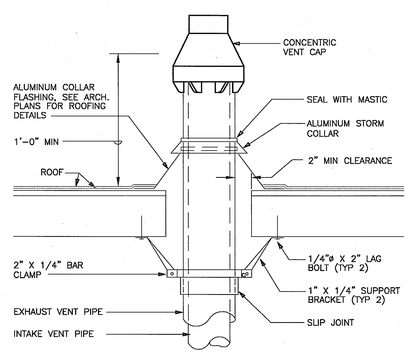

NOTE:

VENT, COLLAR, AND FLASHING BY MECHANICAL CONTRACTOR.

6 CONCENTRIC VENT THRU ROOF DETAIL
SCALE: NONE

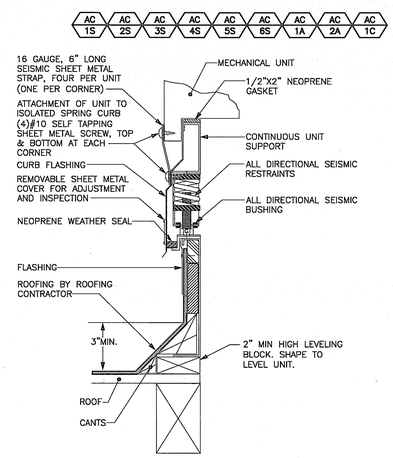

NOTES:

1. BASED ON MASON 2" DEFLECTION SPRING VIBRATION ISOLATION CURB (OPA# 0468).
2. SEE STRUCTURAL OR ARCHITECTURAL DRAWINGS FOR ADDITIONAL INFORMATION

3 TYPICAL AC UNIT ROOF-TOP CURB WITH ISOLATORS
SCALE: NONE

MIG
MOORE IACOFANO GOLTSMAN, INC.
801 N. HARBOR BLVD. FULLERTON, CA 92831
TEL 714/871-3638
FAX 714/871-1188
www.migcom.com

PITASSI ARCHITECTS, INC.
8439 White Oak Ave., Suite. 105
Rancho Cucamonga, Ca 91730
Tel. 909-980-1361 ▪ Fax. 909-944-5814
e-mail. pjpaia@pitassiarchitects.com

CONSULTANT:

GLUMAC
16735 Von Karman Ave., Suite 250
Irvine, CA 92606-4965
T. 949.833.8160 F. 949.833.0252
www.glumac.com
Job No.: 406134PI
Contact: RG/AK
engineers for a sustainable future

PERRIS VALLEY Big League Dreams

2155 Trumble Road
Perris, California 92570

SHEET TITLE
MECHANICAL DETAILS

100% CONSTRUCTION DOCUMENT

DATE	REVISIONS

STAMP

CHECKED BY	DATE
-	-

DATE	FILE NAME
01-07-10	
DRAWN BY -	SHEET M-6.1
JOB NO. 05208.00	
SCALE	