NOTE:
PROVIDE BLANKFACE TYPE ROOM TEMPERATURE SENSOR FOR MONITORING ONLY AND CONNECT TO THE EMS (BY CONTROLS CONTRACTOR). FOR FC-1S ONLY.

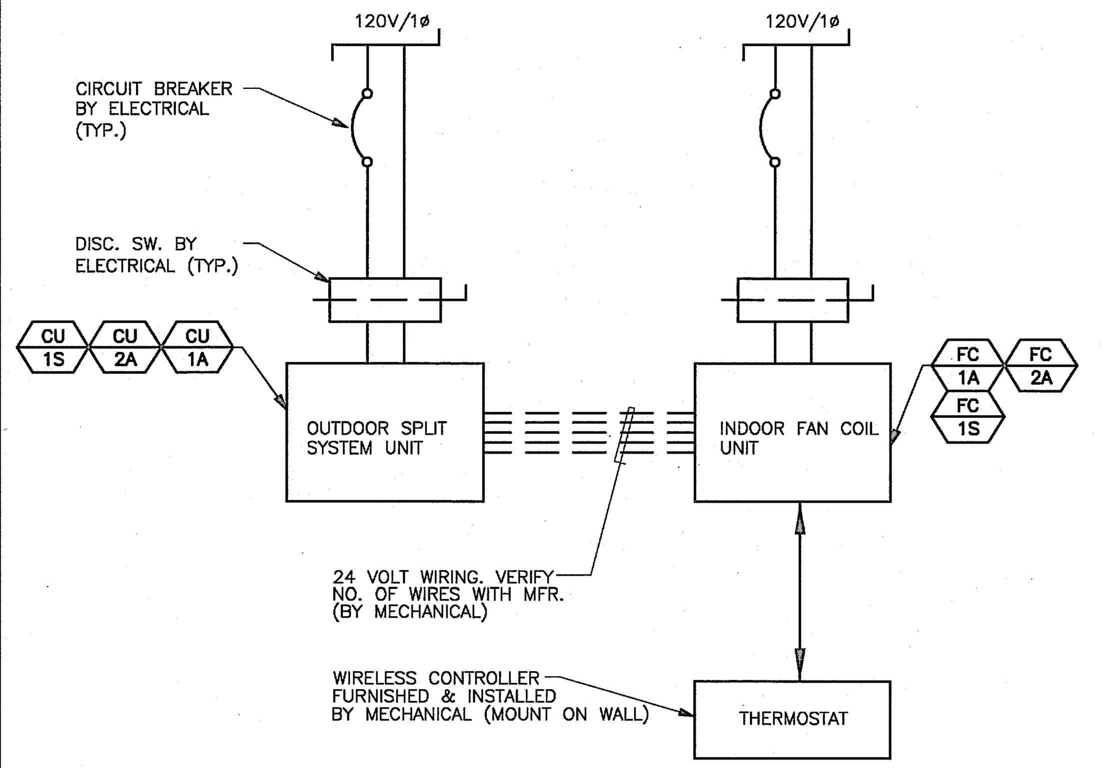

9 SPLIT SYSTEM CONTROL
SCALE: NONE

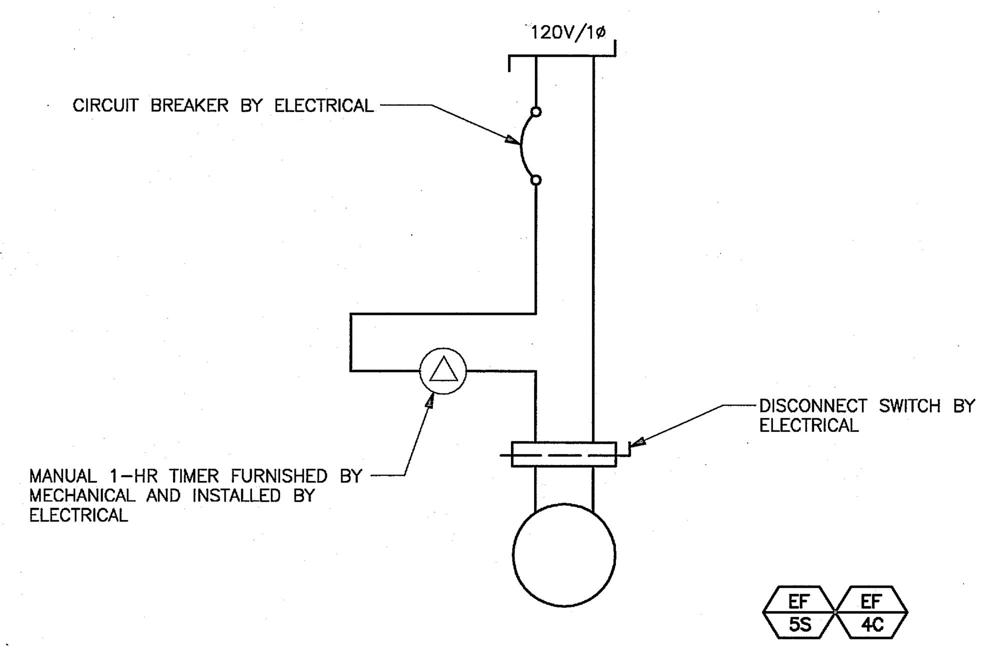

7 EXHAUST FAN CONTROL
SCALE: NONE

NOTE:
PROVIDE CONTROL DEVICES (RELAYS, CONTACTS, ETC.) TO INTERLOCK EF-1M & 3M TO OPERATE TOGETHER FOR A FULLY FUNCTIONAL SYSTEM.

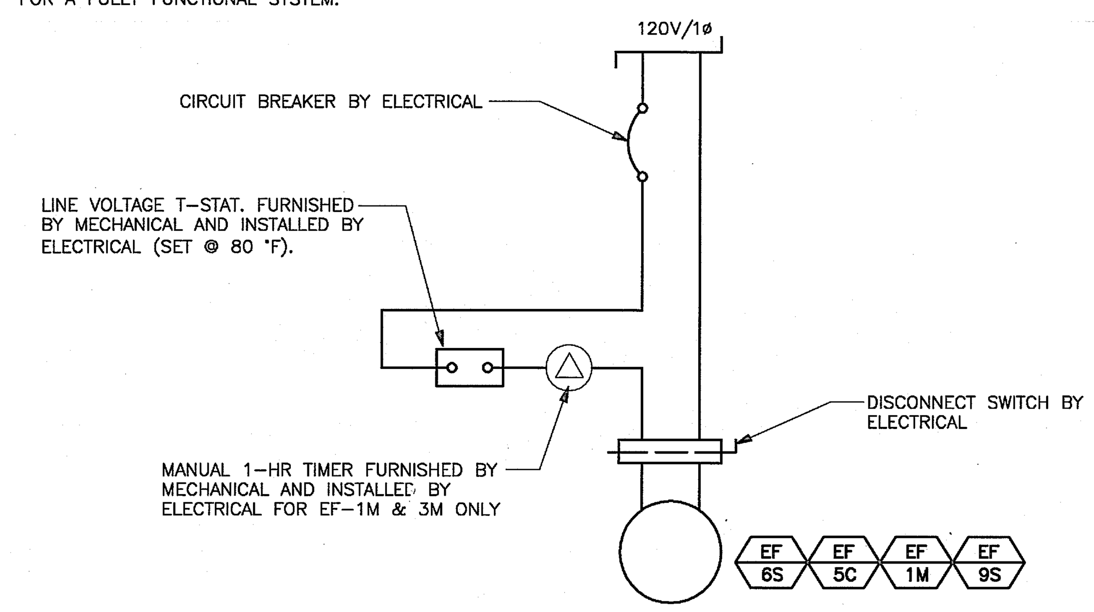

4 EXHAUST FAN CONTROL
SCALE: NONE

NOTE:
ELECTRICAL CONTRACTOR SHALL PROVIDE REQUIRED RELAY ACCESSORIES FOR CONNECTION OF 120 V/1ø VENTILATION EQUIPMENT TO 277 V/1ø LIGHTING AS APPLICABLE.

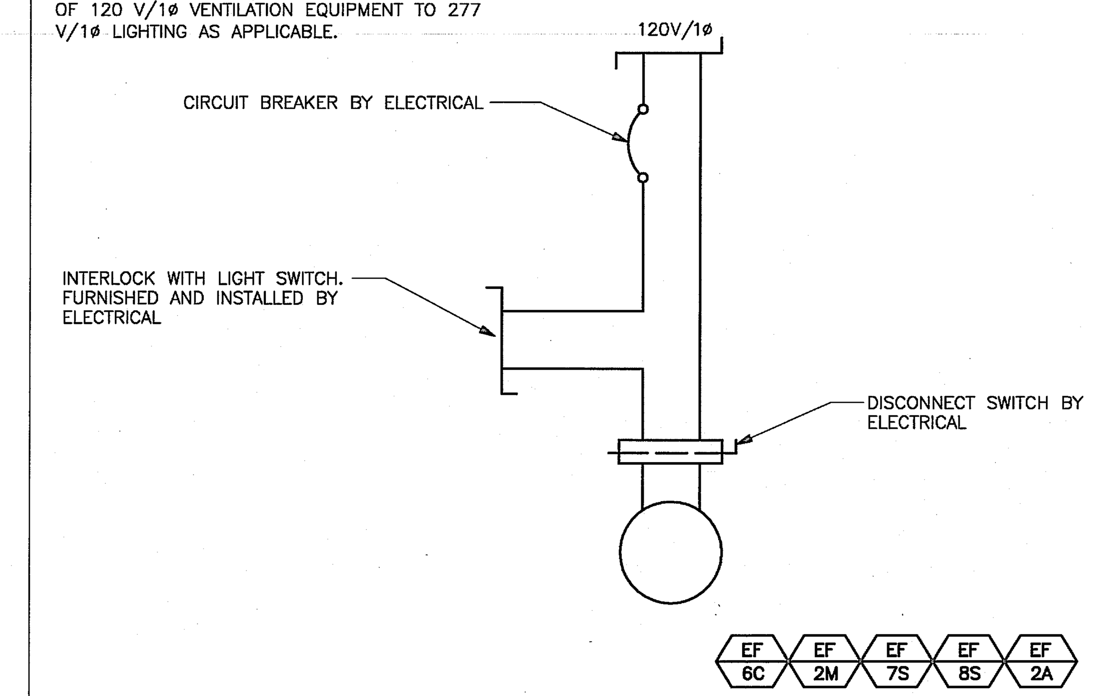

1 EXHAUST FAN CONTROL
SCALE: NONE

* NOTE

THIS MATERIAL WAS EXTRACTED BY 3M FIRE PROTECTION PRODUCTS FROM THE 2002 EDITION OF THE UL FIRE RESISTANCE DIRECTORY

DESIGN NO. GD 531 F
GREASE DUCT PROTECTION
ICBO ES AC101
SECTION 5.4 PASS
SECTION 5.5 PASS

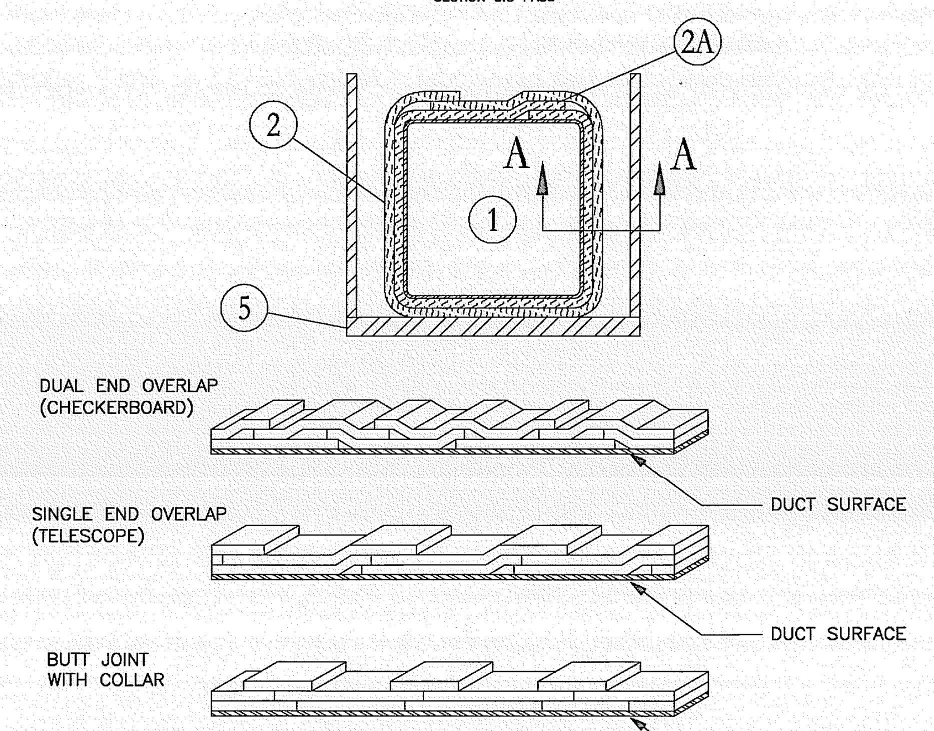

SECTION A-A

1. GREASE DUCT:

A continuously welded, liquidtight L-shaped duct system with horizontal and vertical shafts constructed of 16 GA sheet steel with outside dimensions of max. 24-in. high x 24-in. wide. When required, equip the duct with a field fabricated access door. Construct the duct using sections affixed to each other with seams. Reinforce the duct to IMC or NFPA 96 requirements designed to carry the weight of the grease duct assembly covered with insulation under a fire load equivalent to AC101 exposure. Duct to be rigidly supported in accordance with IMC or NFPA 96 requirements and as specified in Item 5.

2. INSULATION:

Use nom. 2-in. thick, 8-pcf blanket made of mineral wool fibers and fiberglass. Use blanket that is fully encapsulated or single faced with a polypropylene/foil scrim. The blanket is available in various widths. Wrap the steel duct with two layers of duct wrap installed with 3-in. min. overlaps at all joints both transverse and longitudinal. Expose the faced side of fully encapsulated or single faced blanket to view. Install insulation with zero clearance at any point. Wrap inner layer around the duct so that each exposed edge of the inner layer is overlapped onto the starting edge. Space the starting edge of the outer layer band a max. 3 in. from the exposed edge of the inner layer (2A). Overlap the exposed edge of the outer layer onto the exposed edge of the inner layer (2A) and a min. 3 in. onto the starting edge of the preceding outer layer. Alternate the overlap location from side to side. Overall nom. thickness of 6 in. at overlaps. The longitudinal overlaps of adjacent blankets (2A) can be accomplished by one of the following three methods as depicted in the drawings:
a 3-inch overlap checkerboard pattern for both layers where both edges of each alternating blanket are covered by each adjacent blanket whose edges are exposed. The outer layer edges are offset 12 in. from the inner layer, as shown in Section A-A, or a 3-inch overlap telescoping method where each adjacent blanket has one edge exposed and one edge covered by the next blanket, this technique is duplicated for the outer layer as shown in Section A-A, or
a butt splice with collar method where the blankets are butted together on both layers and a 6-inch wide collar of blanket is centered over the butt splice of the outer layer overlapping each adjacent blanket 3-inches. Reference Product Section of this Directory for more details.
Listed Manufacturer:
3M -
Insulation
Mineral Wool Blanket
3M Fire Barrier Duct Wrap 20A

3. PINS: Not shown.

Weld min. 12 GA, min. 6-1/2-in. long, copper-coated steel insulation pins or 12 GA. insulated cup head pins to the duct. Locate pins at all blanket overlaps and meet the following requirements. On all sides of duct, space pins in rows max. 8-in. apart and the pins in the rows are max. 10-1/2-in. O.C. Locate pins max. 4 in. from the edges of the duct. Secure blanket to pins with 1-1/2 in. square or round galvanized or stainless steel speed clips. Turn down or cut off insulation pins that extend beyond the outer blanket wrap layer.

4. ACCESS DOOR: (Not shown)

When required, mark and cut a clean-out access opening into the duct at mid-height along the horizontal section of the duct after the duct is insulated. Cut a 13 x 13-in. opening in the insulation system (2). Cut a 10 in. x 10 in. opening into the side of the duct so that a 1-in. clearance in maintained around the perimeter of the opening and the insulation system. Weld four 4 x 1/4-in. all-thread rods to the duct, one at each corner of the duct so that they are 11-in. O.C. Cut a 13 x 13-in. 16 GA plate to be used as a door. Drill holes in the door to match the rod pattern and seal the duct by overlapping the opening by 1-1/2-in. on all sides. Place the door over the threaded rods. Weld four 6-1/2-in. long, 12 GA copper-coated steel insulation pins to the access door corners so that the pins are 9-in. O.C. Apply three layers of insulation (2) over the access door. Cut the first layer into a 13 x 13-in. square and install it over the pins and covering the door. Cut the second layer into a 15 x 15-in. square and install it over the pins and covering the first layer so that a 1-in. overlap exists. Cut the third layer into a 17 x 17-in. square and install it over the pins and covering the first layer so that a 1-in. overlap exists. Secure blanket to pins with 1-1/2 in. square or round galvanized or stainless steel speed clips. Turn down or cut off insulation pins that extend beyond the outer blanket wrap layer. Secure the access door assembly by placing steel tubing over the threaded rod, then apply washers and wing nuts over the threaded rod.

5. STRAPPING: (Not Shown)

As an option to pins, use min. 1/2-in. wide nom. 0.015-in. thick carbon or stainless steel bands. When needed, use filament tape as a temporary holding method for the insulation prior to banding to ease installation. Place bands max. 1.5 in. from each blanket edge and max. 10-1/2-in. O.C. Tension the banding material to hold the insulation (2) in place without causing any cutting or damage to the insulation or duct.

6. SUPPORTS: (Not shown)

After the installation of the insulation system is complete, add a typical trapeze support system. Center insulated duct on trapeze hangers so that a space exists between insulated duct and rods. Support hanger systems do not need to be wrapped. Attach threaded rods through concrete ceiling and secure using appropriate size washers and nuts or secure threaded rods using appropriate size steel drop in expansion type masonry anchors. Extend trapeze support at least 2-in. on each side of insulated duct and rods. When supporting smaller ducts, shorter length angles are permitted as long as other requirements are met. Horizontal supports a max. 60-in. O.C., starting at the center of the vertical rise portion. Use min. 1/2-in. all-thread rod bolted to 2 x 2 x 1/4-in. steel angle measuring 45 in. long to assemble the trapeze supports. Space the all-thread rods a max. 6 in. away from the edge of the insulated duct with 3/8 in. clearance holes drilled 1-1/2 in. from each end.

10 FIRE BARRIER DUCT WRAP
SCALE: NONE

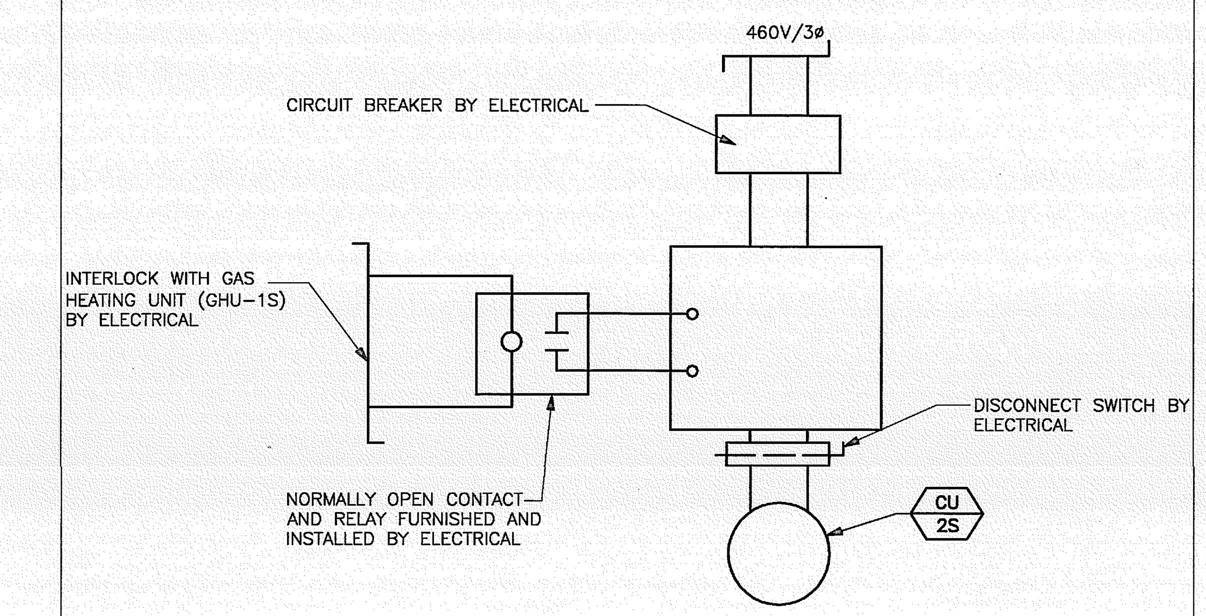

8 CONDENSING UNIT CONTROL
SCALE: NONE

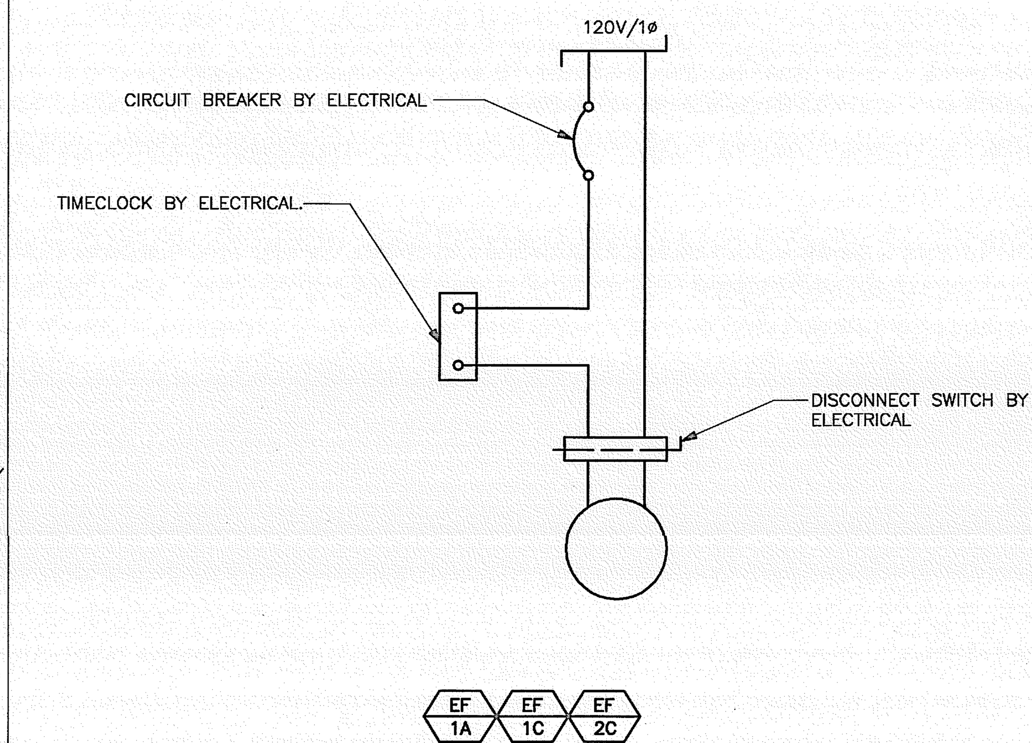

5 EXHAUST FAN CONTROL
SCALE: NONE

NOTES:

1. ELECTRICAL CONTRACTOR SHALL PROVIDE DUCT SMOKE DETECTOR AND MECHANICAL SHALL INSTALL.
2. SEE SHEET M-6.2 DETAIL 6 & SHEETS M-6.5 & M-6.6 FOR ADDITIONAL INFORMATION.
3. PROVIDE CONTROL DEVICES (RELAYS, CONTACTS, ETC.) TO INTERLOCK FANS, CONDENSING UNITS, ETC. TO EQUIPMENT FOR A FULLY FUNCTIONAL SYSTEM.

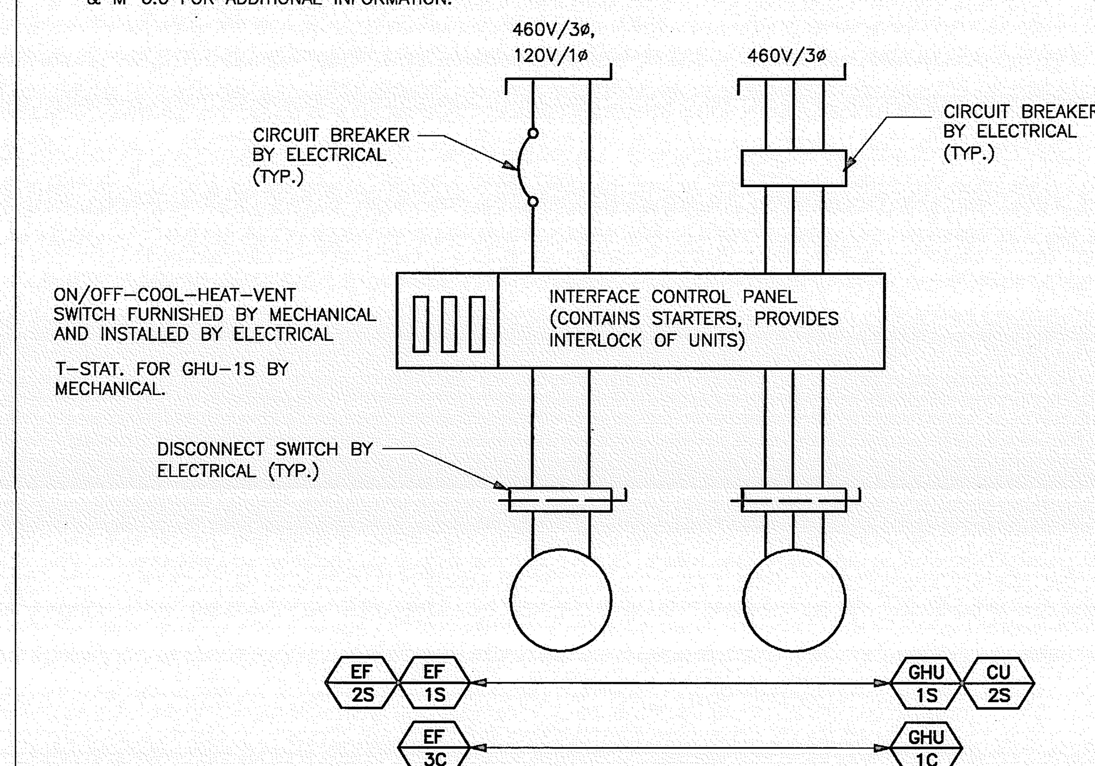

2 KITCHEN EXHAUST FAN/MAKE-UP CONTROL
SCALE: NONE

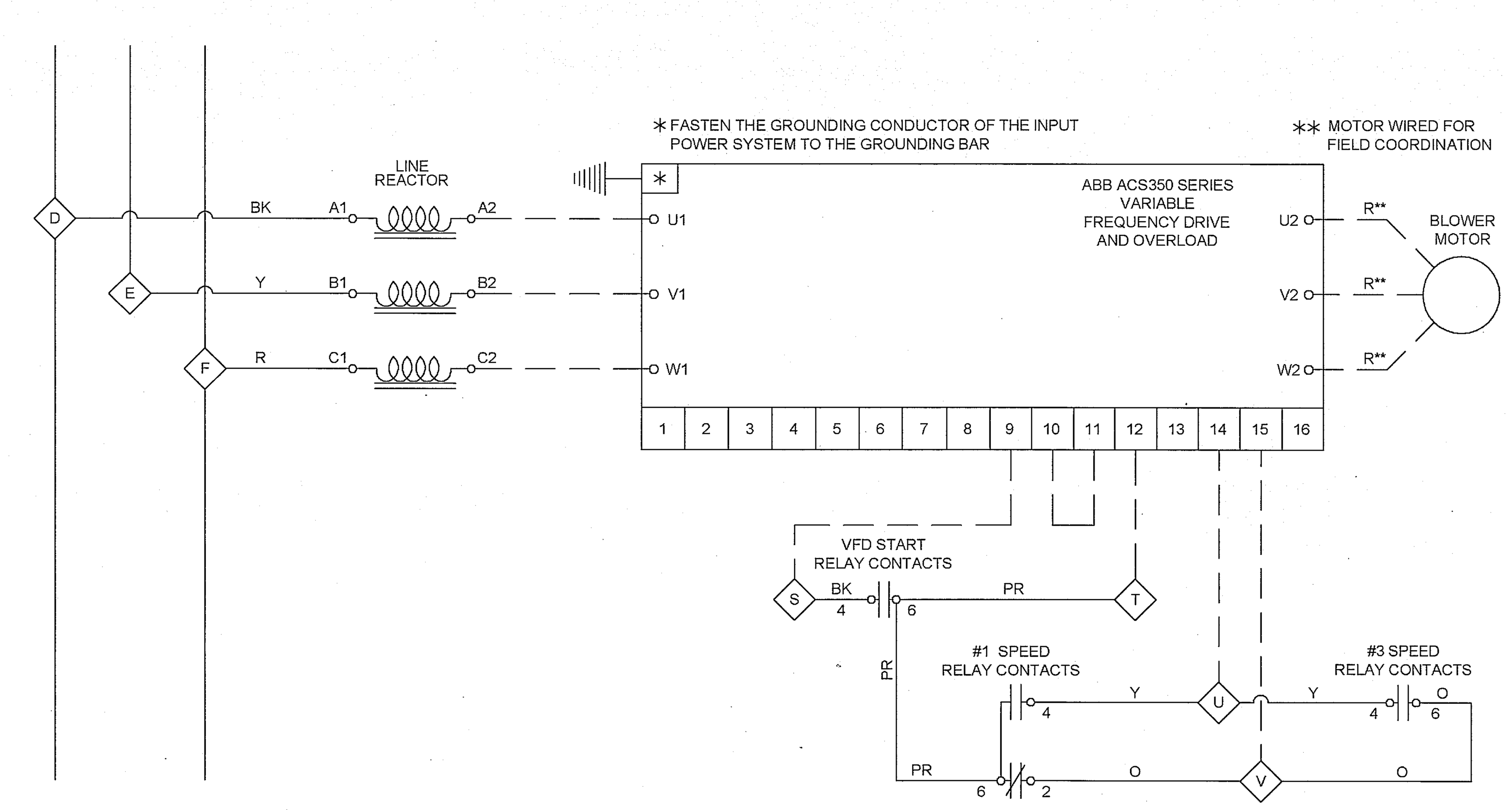

6 GHU-1S CONTROL DIAGRAM
SCALE: NONE

NOTE: SEE SHEET M-6.2 DETAILS 2 AND 8 FOR ADDITIONAL INFORMATION.

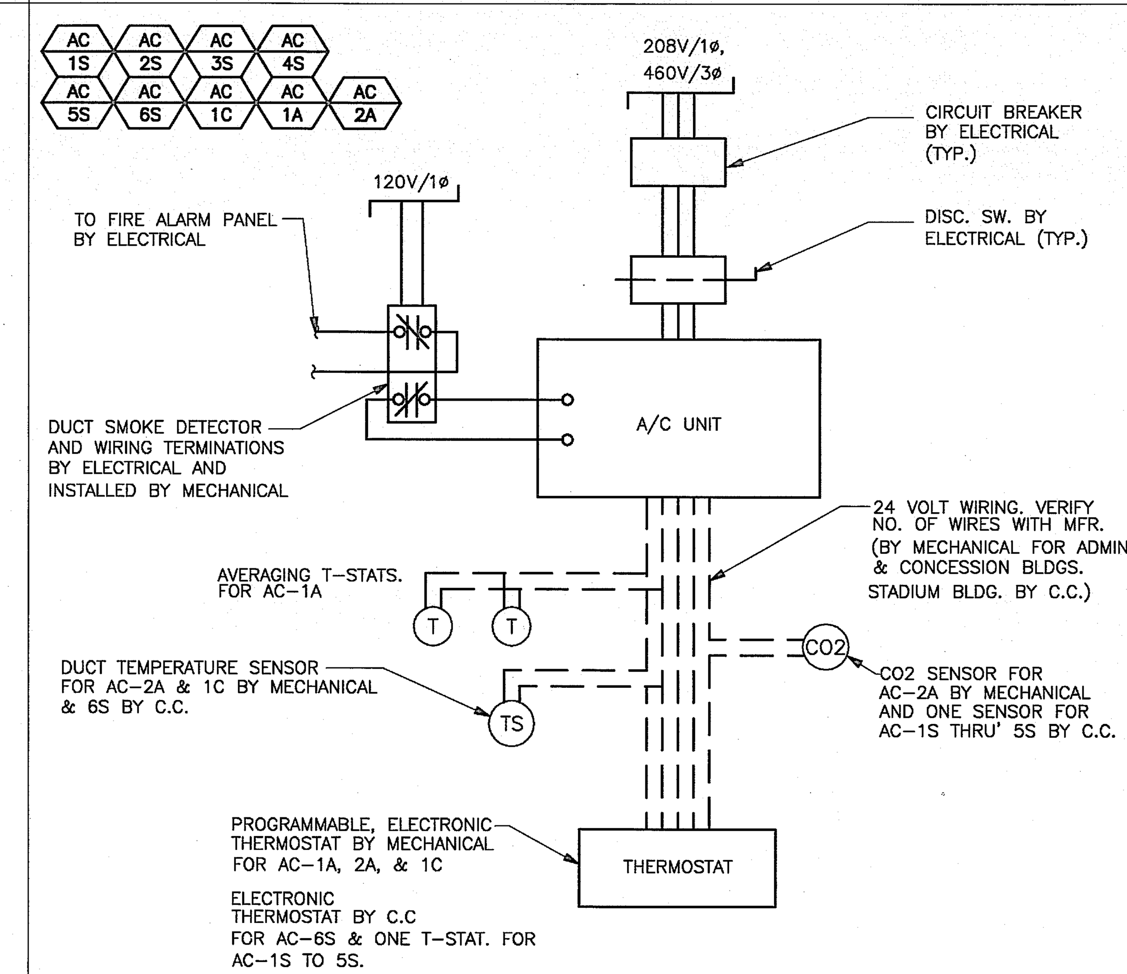

NOTES:

1. SEE SHEETS M-6.5 AND M-6.6 FOR ADDITIONAL INFORMATION.

3 A/C UNIT CONTROL W/ SMOKE DETECTOR
SCALE: NONE

MIG
MOORE IACOFANO GOLTSMAN, INC.
801 N. HARBOR BLVD.
FULLERTON, CA 92831
TEL 714/871-3638
FAX 714/871-1188
www.migcom.com

PITASSI ARCHITECTS, INC.
8439 White Oak Ave., Suite. 105
Rancho Cucamonga, Ca 91730
Tel. 909-980-1361 ▫ Fax. 909-944-5814
e-mail. pjpaia@pitassiarchitects.com

CONSULTANT:

GLUMAC
16735 Von Karman Ave., Suite 250
Irvine, CA 92606-4965
T. 949.833.8190 F. 949.833.0252
www.glumac.com
Job No.: 408134PI
Contact: RG/AK
engineers for a sustainable future™

PERRIS VALLEY Big League Dreams

2155 Trumble Road
Perris, California 92570

SHEET TITLE
MECHANICAL DETAILS

100% CONSTRUCTION DOCUMENT

DATE	REVISIONS

STAMP

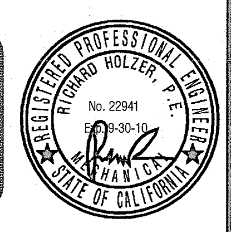

CHECKED BY	DATE
-	-

DATE	FILE NAME
01-07-10	
DRAWN BY	SHEET
-	M-6.2
JOB NO.	
05208.00	
SCALE	